COUPLINGS

Slip-Aire Friction Clutches

1.4Nm - 34Nm Set by Air Pressure, 8 - 16mm Bores

AAS
AAO

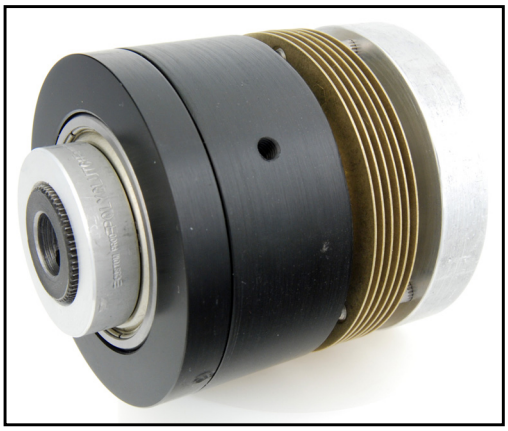

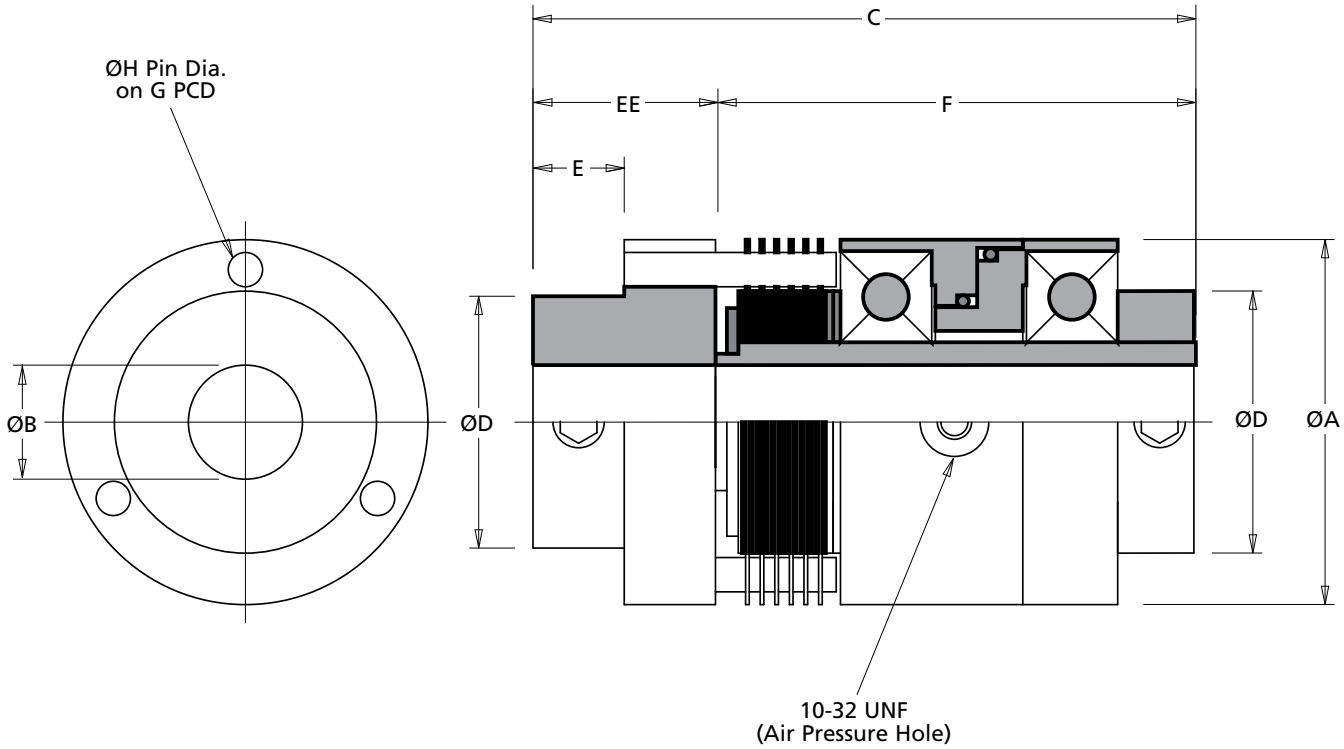

Discounts: 21+ -20% | 100+ -25% | 500+ -30%

Part Number		ØA	ØB Std. +0.002 -0.000	ØB Max.	C	ØD	E	EE	F	G PCD	ØH	Capacity Rated Nm	Capacity Max. Nm	Watts	Friction Surfaces	Price Each 1 - 20 AAS	Price Each 1 - 20 AAO
AAS20-8	AAO20-8	31.75	8	10	63.50	19.30	6.35	12.70	50.80	26.98	2.39	1.4	2.2	7	8	£222.97	£222.97
AAS24-10	AAO24-10	38.10	10	13	85.85	25.65	9.65	19.05	66.80	33.73	3.18	3.0	6.0	14	12	£401.37	£401.37
AAS32-12	AAO32-12	50.80	12	16	85.34	35.05	12.70	25.40	66.80	42.47	4.78	6.0	12.0	28	12	£494.25	£494.25
AAS44-12	AAO44-12	69.85	12	16	85.34	41.40	12.70	25.40	66.80	60.33	4.78	9.0	34.0	42	12	£613.17	£613.17

Other Info.

AAS Slip-Aire Clutches: Shaft to shaft. Set screws in both housing and cartridge.
AAO Slip-Aire Clutches: Through shaft to pulley, gear socket, etc. Bronze bearing in housing. Set screws in cartridge.
Rated Torque is for continuous operation at 50rpm. Torque can be higher or lower depending on actual rpm and duty cycle.
Max. Torque attainable at 100psi.
Air pressure can be used to adjust the torque range from no air pressure, zero slipping torque to max torque at full air pressure.